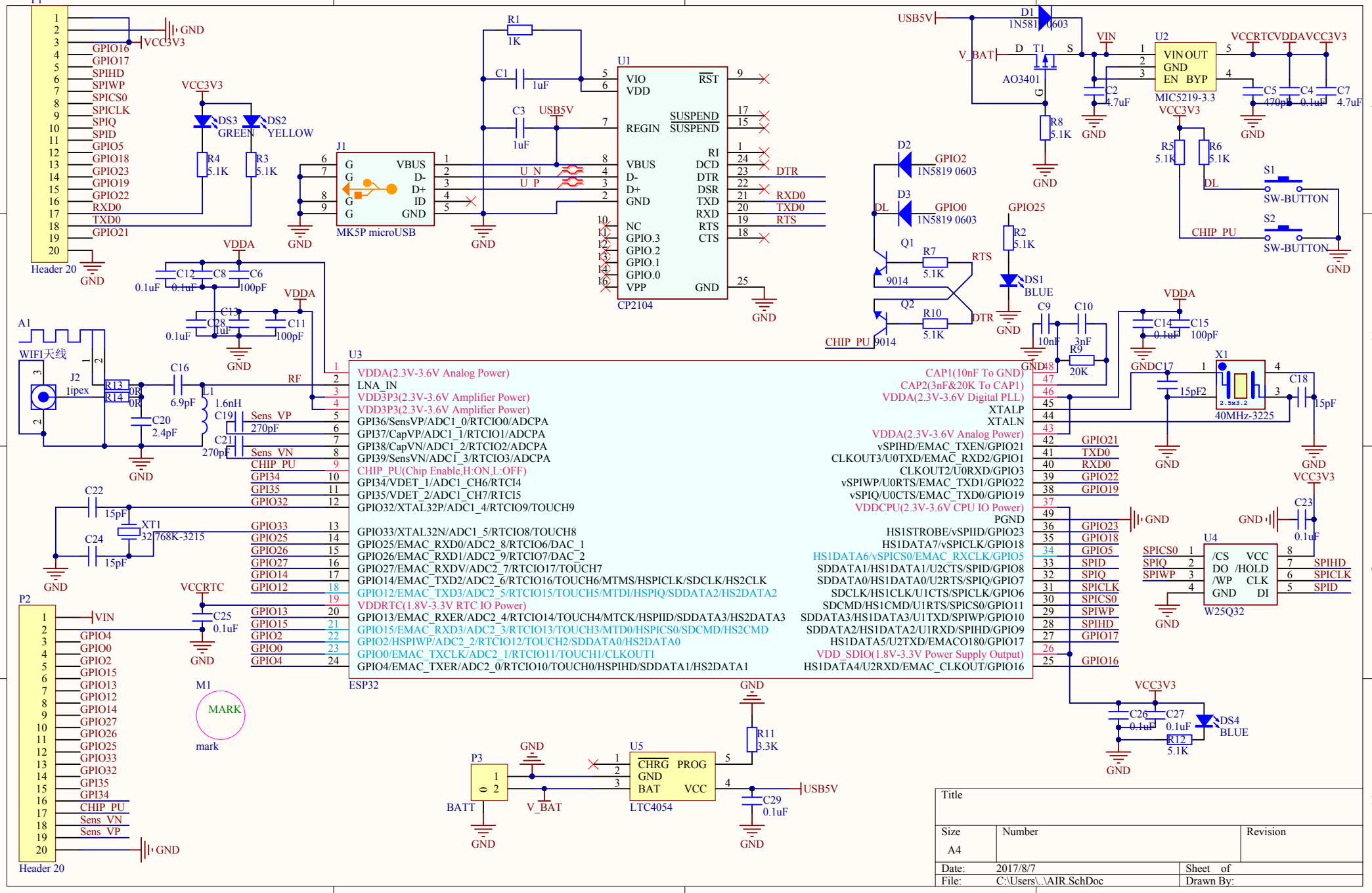
P1
Header 20
GPIO16
GPIO17
SPIHD
SPIWP
SPICS0
SPICLK
SPIQ
SPID
GPIO5
GPIO18
GPIO23
GPIO19
GPIO22
RXD0
TXD0
GPIO21
VCC3V3
GND
DS3 GREEN
DS2 YELLOW
R4 5.1K
R3 5.1K
J1
MK5P microUSB
VBUS
D-
D+
ID
GND
R1 1K
C1 1uF
C3 1uF
USB5V
U1
CP2104
VIO
VDD
REGIN
VBUS
D-
D+
GND
NC
GPIO.3
GPIO.2
GPIO.1
GPIO.0
VPP
RST
SUSPEND
RI
DCD
DTR
DSR
TXD
RXD
RTS
CTS
U_N
U_P
D1 1N5819 0603
V_BAT
T1 AO3401
VIN
U2 MIC5219-3.3
VIN OUT
GND
EN BYP
C2 4.7uF
R8 5.1K
VCCRTC
VDDA
VCC3V3
C5 470pF
C4 0.1uF
C7 4.7uF
R5 5.1K
R6 5.1K
DL
S1 SW-BUTTON
CHIP_PU
S2 SW-BUTTON
D2 1N5819 0603
GPIO2
D3 1N5819 0603
GPIO0
Q1 9014
Q2 9014
R7 5.1K
R10 5.1K
RTS
DTR
CHIP_PU
GPIO25
R2 5.1K
DS1 BLUE
C9 10nF
C10 3nF
R9 20K
C14 0.1uF
C15 100pF
C17 15pF
X1 40MHz-3225
C18 15pF
C12 0.1uF
C8 0.1uF
C6 100pF
C13 0.1uF
C28 1uF
C11 100pF
A1
WIFI天线
J2 1ipex
R13 0R
R14 0R
C16 6.9pF
L1 1.6nH
C20 2.4pF
C19 270pF
C21 270pF
Sens_VP
Sens_VN
RF
U3
ESP32
VDDA(2.3V-3.6V Analog Power)
LNA_IN
VDD3P3(2.3V-3.6V Amplifier Power)
VDD3P3(2.3V-3.6V Amplifier Power)
GPI36/SensVP/ADC1_0/RTCIO0/ADCPA
GPI37/CapVP/ADC1_1/RTCIO1/ADCPA
GPI38/CapVN/ADC1_2/RTCIO2/ADCPA
GPI39/SensVN/ADC1_3/RTCIO3/ADCPA
CHIP_PU(Chip Enable,H:ON,L:OFF)
GPI34/VDET_1/ADC1_CH6/RTCI4
GPI35/VDET_2/ADC1_CH7/RTCI5
GPIO32/XTAL32P/ADC1_4/RTCIO9/TOUCH9
GPIO33/XTAL32N/ADC1_5/RTCIO8/TOUCH8
GPIO25/EMAC_RXD0/ADC2_8/RTCIO6/DAC_1
GPIO26/EMAC_RXD1/ADC2_9/RTCIO7/DAC_2
GPIO27/EMAC_RXDV/ADC2_7/RTCIO17/TOUCH7
GPIO14/EMAC_TXD2/ADC2_6/RTCIO16/TOUCH6/MTMS/HSPICLK/SDCLK/HS2CLK
GPIO12/EMAC_TXD3/ADC2_5/RTCIO15/TOUCH5/MTDI/HSPIQ/SDDATA2/HS2DATA2
VDDRTC(1.8V-3.3V RTC IO Power)
GPIO13/EMAC_RXER/ADC2_4/RTCIO14/TOUCH4/MTCK/HSPIID/SDDATA3/HS2DATA3
GPIO15/EMAC_RXD3/ADC2_3/RTCIO13/TOUCH3/MTD0/HSPICS0/SDCMD/HS2CMD
GPIO2/HSPIWP/ADC2_2/RTCIO12/TOUCH2/SDDATA0/HS2DATA0
GPIO0/EMAC_TXCLK/ADC2_1/RTCIO11/TOUCH1/CLKOUT1
GPIO4/EMAC_TXER/ADC2_0/RTCIO10/TOUCH0/HSPIHD/SDDATA1/HS2DATA1
CAP1(10nF To GND)
CAP2(3nF&20K To CAP1)
VDDA(2.3V-3.6V Digital PLL)
XTALP
XTALN
VDDA(2.3V-3.6V Analog Power)
vSPIHD/EMAC_TXEN/GPIO21
CLKOUT3/U0TXD/EMAC_RXD2/GPIO1
CLKOUT2/U0RXD/GPIO3
vSPIWP/U0RTS/EMAC_TXD1/GPIO22
vSPIQ/U0CTS/EMAC_TXD0/GPIO19
VDDCPU(2.3V-3.6V CPU IO Power)
PGND
HS1STROBE/vSPIID/GPIO23
HS1DATA7/vSPICLK/GPIO18
HS1DATA6/vSPICS0/EMAC_RXCLK/GPIO5
SDDATA1/HS1DATA1/U2CTS/SPID/GPIO8
SDDATA0/HS1DATA0/U2RTS/SPIQ/GPIO7
SDCLK/HS1CLK/U1CTS/SPICLK/GPIO6
SDCMD/HS1CMD/U1RTS/SPICS0/GPIO11
SDDATA3/HS1DATA3/U1TXD/SPIWP/GPIO10
SDDATA2/HS1DATA2/U1RXD/SPIHD/GPIO9
HS1DATA5/U2TXD/EMACO180/GPIO17
VDD_SDIO(1.8V-3.3V Power Supply Output)
HS1DATA4/U2RXD/EMAC_CLKOUT/GPIO16
C22 15pF
C24 15pF
XT1 32.768K-3215
C25 0.1uF
C23 0.1uF
U4 W25Q32
/CS
DO
/WP
GND
VCC
/HOLD
CLK
DI
SPICS0
SPIQ
SPIWP
SPIHD
SPICLK
SPID
P2
Header 20
VIN
GPIO4
GPIO0
GPIO2
GPIO15
GPIO13
GPIO12
GPIO14
GPIO27
GPIO26
GPIO25
GPIO33
GPIO32
GPI35
GPI34
CHIP_PU
Sens_VN
Sens_VP
M1
MARK
mark
C26 0.1uF
C27 0.1uF
R12 5.1K
DS4 BLUE
P3
BATT
U5 LTC4054
CHRG
GND
BAT
PROG
VCC
R11 3.3K
C29 0.1uF
USB5V
Title
Size A4
Number
Revision
Date: 2017/8/7
Sheet of
File: C:\Users\..\AIR.SchDoc
Drawn By: